CONO PIENO SOTTO PRESSIONE
FULL CONE UNDER PRESSURE
CONO LLENO BAJO PRESIÓN

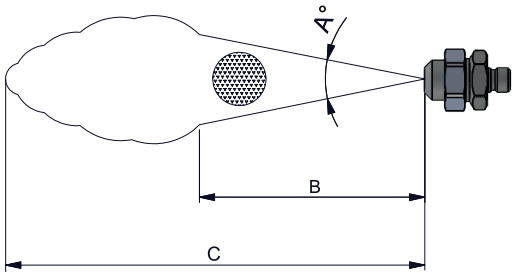

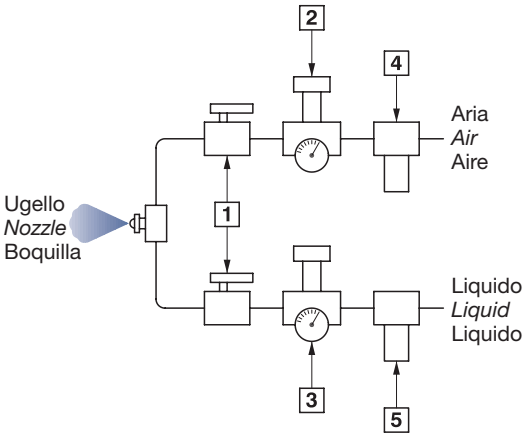

B = distanza entro la quale l'angolo di spruzzo rimane costante. Oltre questa distanza il getto assume una forma turbolenta.
C = distanza massima raggiungibile dal getto.

B = distance throughout spray angle is maintained constant. Beyond this distance the spray becomes turbulent.

C = maximum spray distance.

B = Distancia en cuyo interior el ángulo se mantiene constante. Fuera de esta distancia el chorro se vuelve turbulento.

C = máxima distancia de la aspersión.

Spray set-up	*Liquid Capacity (liters per hour) and Air Capacity (liters per minute)*															*Spray dimensions*				
	Liquid Pressure																			
	0,7 Bar			1,5 Bar			2 Bar			3 Bar			4 Bar							
	Air Press. (bar)	Liquid l/h	AIR l/min	Air Press. (bar)	Liquid l/h	AIR l/min	Air Press. (bar)	Liquid l/h	AIR l/min	Air Press. (bar)	Liquid l/h	AIR l/min	Air Press. (bar)	Liquid l/h	AIR l/min	Air bar	H_2O bar	A°	B cm	C m
B2-P11	0.7	2.5	16	1.1	6.4	12	1.4	6.4	14	2.7	6.2	23	3.5	7.8	26					
	0.85	1.8	19	1.4	5.0	15	1.7	5.5	17	2.8	5.7	25	3.7	7.3	29	0.85	0.7	13°	30	2.7
	1.0	1.4	22	1.7	4.1	19	2.0	4.5	20	3.0	5.2	27	3.9	6.4	33	1.7	1.5	13°	33	3.0
				1.8	3.4	20	2.2	3.4	24	3.1	4.7	29	4.2	5.5	38	2.5	2.0	13°	36	3.4
				2.0	3.0	23	2.4	3.0	26	3.2	4.3	31	4.5	4.5	43	3.1	3.0	14°	39	3.8
				2.1	2.6	25	2.5	2.5	28	3.4	3.9	33	4.6	4.1	45	4.5	4.0	15°	44	4.4
				2.2	2.0	27	2.7	2.3	31	3.7	3.0	38	4.8	3.7	47					
B2-P12	0.7	2.5	19	1.4	5.7	27	1.7	6.7	29	2.2	9.2	34	2.8	11.9	39					
	0.85	2.0	22	1.5	5.2	29	1.8	6.4	31	2.5	8.2	39	3.1	11.0	43	0.85	0.7	12°	43	3.7
	1.0	1.6	26	1.7	4.6	32	2.0	5.9	34	2.8	7.2	44	3.4	10.1	47	1.5	1.5	13°	46	4.0
				1.8	4.3	35	2.1	5.2	37	3.0	6.7	47	3.7	9.2	52	2.4	2.0	13°	48	4.3
				2.0	3.9	37	2.2	4.6	40	3.1	6.3	49	3.9	8.4	58	3.0	3.0	13°	51	4.0
				2.1	3.4	40	2.4	4.3	43	3.2	5.9	52	4.2	7.6	62	3.9	4.0	15°	56	5.2
							2.7	3.6	48	3.4	5.5	55	4.5	8.8	68					
B3-P12	0.85	4.8	21	1.7	8.4	31	2.0	10.7	33	2.7	16.5	37	3.4	20.0	43					
	1.1	4.1	27	1.8	7.5	35	2.1	9.8	37	2.8	15.4	38	3.7	16.4	47	1.5	0.7	12°	48	4.0
	1.4	3.4	33	2.0	7.0	37	2.4	8.2	42	3.1	13.6	43	3.9	16.8	50	2.5	1.5	13°	51	4.3
	1.5	3.1	35	2.2	5.7	44	2.7	6.8	48	3.4	11.8	49	4.2	15.2	55	3.0	2.0	13°	53	4.6
	1.7	3.0	39	2.5	4.8	49	3.0	5.9	55	3.7	10.4	55	4.5	13.8	60	3.4	3.0	14°	56	4.9
	1.8	2.9	41	2.8	4.1	54	3.2	5.0	59	3.9	9.1	61	4.8	12.4	65	4.2	4.0	15°	60	5.3
	2.0	2.8	44	3.1	3.6	59	3.5	4.1	65	4.2	7.9	65	4.9	11.8	68					
B5-P13	1.1	13.0	76	2.2	17.8	116	2.8	20.0	136	3.4	32.0	149	4.6	37	193					
	1.4	8.9	91	2.5	13.1	130	3.1	16.3	149	3.9	25.0	170	5.3	29	220	1.7	0.7	18°	66	4.9
	1.5	7.2	98	2.8	9.5	143	3.4	11.9	163	4.6	15.9	205	5.6	25	235	2.8	1.5	20°	76	6.1
	1.7	5.8	105	3.1	7.0	157	3.9	7.0	187	5.3	9.1	240	6.0	21	250	3.9	2.0	20°	81	6.7
	1.8	4.7	112	3.4	4.9	171	4.2	4.7	205	5.6	6.8	255	6.3	17	270	5.3	3.0	21°	91	7.9
	2.0	3.6	119	3.5	4.2	178	4.6	3.0	220	6.0	5.0	275	6.7	14	290	6.0	4.0	21°	97	9.1
	2.1	2.7	127							6.3	3.6	290	7.0	11	306					
B6-P13	0.85	31	57	1.4	61	69	2.1	53	96	2.7	80	103	3.8	88	135					
	1.0	25	66	1.5	54	76	2.4	41	112	3.0	69	117	4.2	73	156	1.0	0.7	17°	61	4.9
	1.1	18.5	75	1.7	48	85	2.7	31	127	3.2	59	130	4.6	61	176	1.8	1.5	18°	69	5.6
	1.3	12.9	85	1.8	41	93	2.8	26	136	3.5	49	146	4.9	48	196	2.8	2.0	20°	76	6.7
				2.0	35	102	3.0	22	144	3.7	44	154	5.3	39	215	3.5	3.0	20°	79	7.0
				2.4	30	110				3.8	37	161	5.6	31	240	4.9	4.0	21°	91	8.5
				2.2	25	119				3.9	36	170	6.0	23	260					
B8- P14	1.0	44	86	1.4	125	79	2.0	123	106	2.2	199	86	3.0	250	99					
	1.1	32	102	1.5	106	91	2.1	108	119	2.5	174	110	3.2	225	120	1.0	0.7	19°	89	6.1
				1.7	87	105	2.2	95	130	2.8	146	133	3.5	205	141	1.7	1.5	20°	99	7.0
				1.8	70	118	2.4	79	143	3.1	121	154	3.8	182	163	2.4	2.0	21°	104	7.6
				2.0	55	130	2.5	64	155	3.2	108	166	4.1	159	184	3.1	3.0	21°	107	7.9
							2.7	52	166	3.4	95	176	4.6	121	225	3.8	4.0	22°	117	9.1
							2.8	42	178	3.5	84	187	4.9	93	256					