GETTO PIATTO A SIFONE O PER GRAVITÀ
FLAT SPRAY SIPHON OR GRAVITY
SALIDA PLANA POR SIFÓN O GRAVEDAD

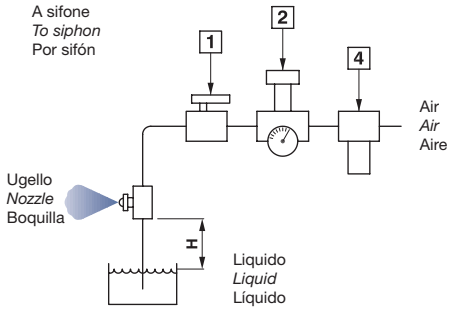

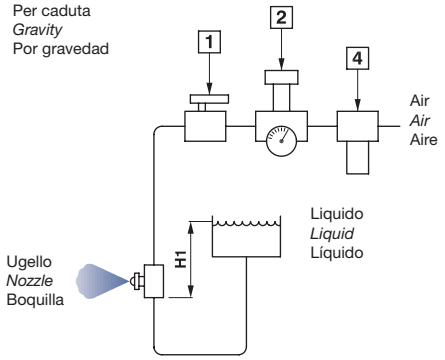

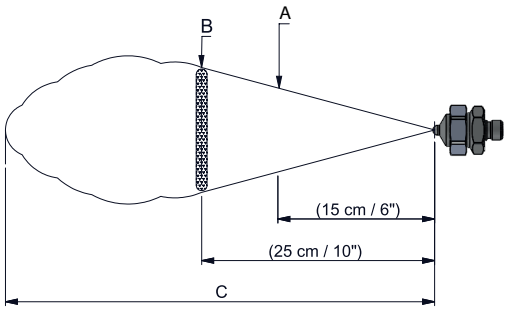

Le dimensioni A e B mostrano le coperture alle diverse distanze, oltre la distanza C il getto diventa frastagliato.

The dimensions A and B show the coverages at different distances, beyond the distance C the jet becomes jagged.

Las dimensiones A y B muestran Las coberturas a diferentes distancias, más allá de la distancia C, el chorro se vuelve irregular.

Spray set-up	*Atomizing Air*		*Liquid Capacity (liters per hour)*								*Spray H = 20 cm*			
	Air press. bar	Air l/min	GRAVITY H1			SIPHON H								
			45 cm	30 cm	15 cm	10 cm	20 cm	30 cm	60 cm	90 cm	Air bar	A cm	B cm	C m
B3 - S21	0.7	28	1.3	1.2	1.1	1.0	0.95	0.83	0.64	0.49	0.7	20	26	2.1
	1.5	43	1.2	1.1	1.0	0.90	0.86	0.78	0.66	0.54	1.5	21	29	
	2.0	50	0.82	0.76	0.68	0.57	0.50				2.0	23	30	
B4 - S22	1.5	56	3.7	3.5	3.3	2.9	2.8	2.5	2.3	2.1	1.5	23	32	2.7
	2.0	65	3.4	3.3	3.1	2.8	2.7	2.6	2.4	2.2	2.0	24	34	2.7
	3.0	87	2.8	2.7	2.5	2.4	2.2	2.1	1.9	1.7	3.0	27	37	3.0
	4.0	110	1.9	1.8	1.6	1.5	1.3	1.2			4.0	28	39	2.7
B5 - S23	1.5	68	5.1	4.8	4.5	3.8	3.7	3.5	3.0	2.4	1.5	19	23	3.4
	2.0	78	4.9	4.7	4.4	3.6	3.4	3.2	2.9	2.3	2.0	20	25	
	3.0	103	3.4	3.2	3.0	2.2	2.0	1.7			3.0	22	27	
	3.5	117	2.2	2.0	1.7									
B5 - S24	1.5	63	7.6	7.2	6.6	5.7	5.4	5.1	4.6	3.7	1.5	17	22	3.4
	2.0	73	7.6	7.3	6.8	5.9	5.7	5.5	5.0	4.2	2.0	18	23	3.4
	3.0	96	6.4	6.1	5.7	5.0	4.5	4.1	3.3		3.0	20	27	3.4
	3.5	110	4.2	3.7	3.2	2.6								